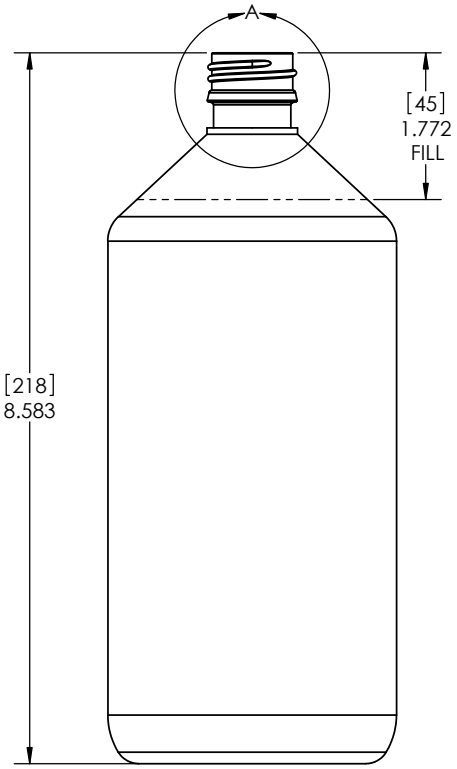

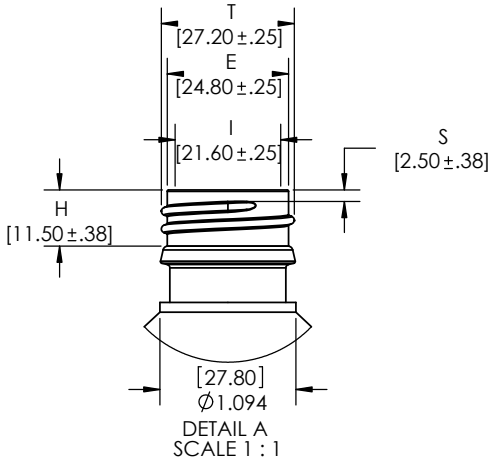

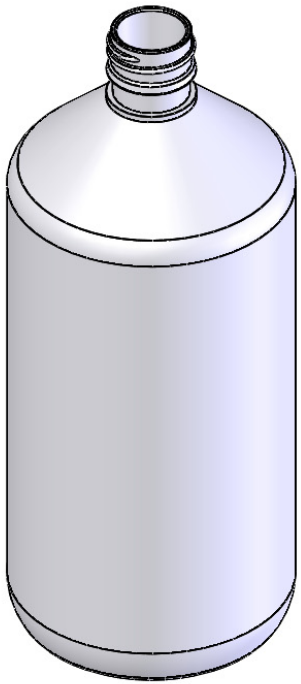

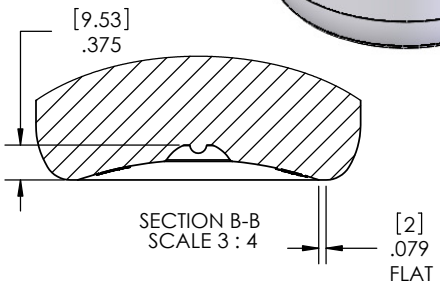

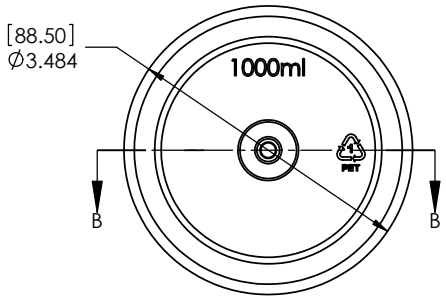

Neck Finish: 28mm ROPP

Novio Reference: DR01610_1

Notes:

Min Thk	Color	Weight	Std Pack
.015[.380]	All Colors	52 Gms±1	560,Pallet

Neck Dimension:

T = 1.071 ± .010
E = .976 ± .010
H = .453 ± .015
I = .850 ± .015
S = .098 ± .015

OverFlow Capacity: **1044 ml ± 15**

Revisions

A	GW was 48,5/3/11,sct
B	Min Thk was .012[.300],6/9/11,sct

UNLESS OTHERWISE SPECIFIED
TOLERANCES: DECIMAL ± .050 [1.27]
ANGULAR ± 1°

DIMENSIONS ARE IN INCHES, [METRIC]

APPROVED BY: PL

novio PACKAGING

SCALE: 2/3 | Date: 06/21/10

1000ml PHARMA VERAL, 28-ROPP CT, PET (33.8oz)

REV: B

SIZE: B | DWG. NO. 1000PV28R

MATERIAL: PET | SHEET 1 OF 1